| REVISIONS | | | | |
|---|---|---|---|---|
| LTR | DESCRIPTION | E.C.N. | DATE | BY/APP'D |
| A | RELEASE TO DOCUMENT CONTROL | 12531 | 11/16/2000 | SN/TL/AL |

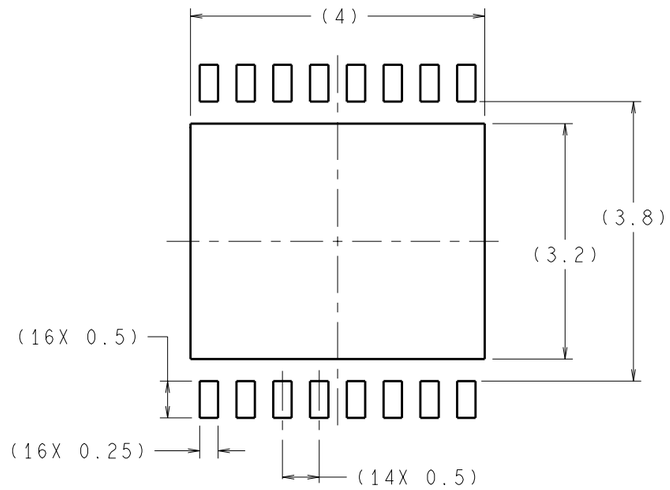


**RECOMMENDED LAND PATTERN**
1:1 RATIO WITH PKG SOLDER PADS

**DIMENSIONS ARE IN MILLIMETERS**

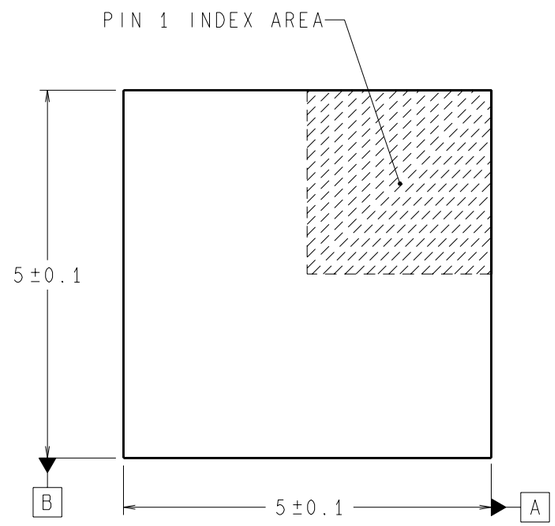


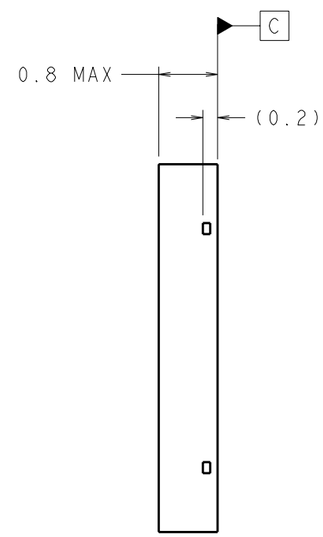


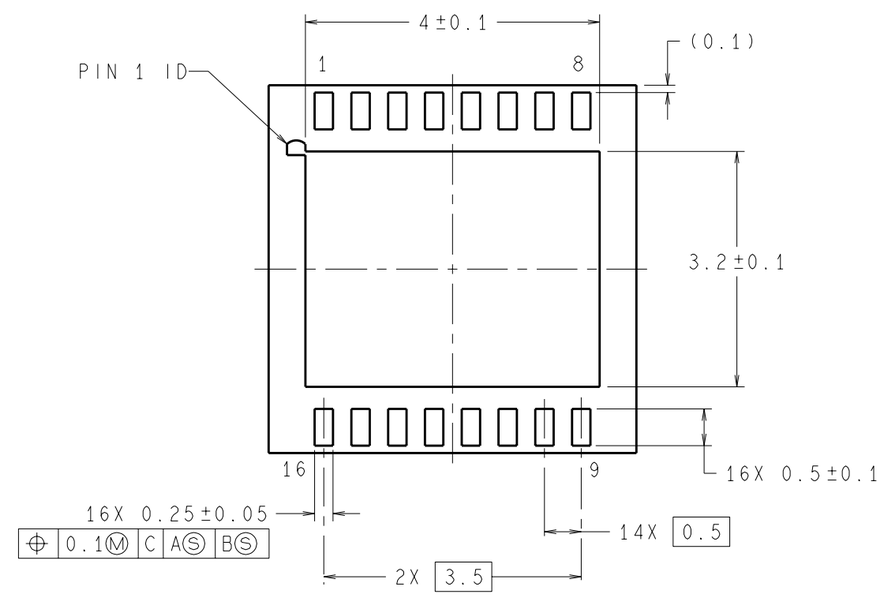


NOTES: UNLESS OTHERWISE SPECIFIED.

1. STANDARD LEAD FINISH TO BE 5.08 MICROMETERS MINIMUM LEAD/TIN (SOLDER) ON COPPER.

2. NO JEDEC REGISTRATION AS OF NOVEMBER 2000.

| APPROVALS | DATE |
|---|---|
| DRAWN N. SANTHIRAN & TL | 11/16/2000 |
| DFTG. CHK. THANH LEQUANG | 11/16/2000 |
| ENGR. CHK. ANTHONY LAW | 11/16/2000 |

PROJECTION INCH [MM]

National Semiconductor
2900 Semiconductor Dr, Santa Clara, CA 95052-8090

LLP, PLASTIC, DUAL, 5 X 5 X 0.75 mm BODY, 16 LD, 0.5 mm PITCH

| SCALE | SIZE | DRAWING NUMBER | REV |
|---|---|---|---|
| N/A | C | (SC)MKT-LDA16A | A |

FORMERLY: N/A

SHEET 1 of 1